Vestil Manufacturing Corp.
2999 North Wayne Street, P.O. Box 507, Angola, IN 46703

WTJ-E Series Vehicle Mounted Jib Cranes

Instruction Manual

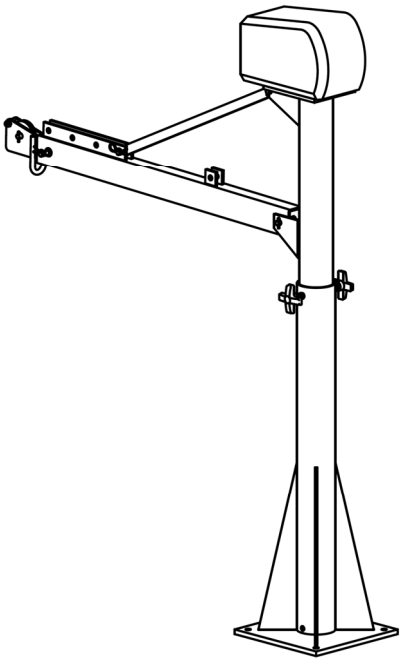

WTJ-E-15-3-AC

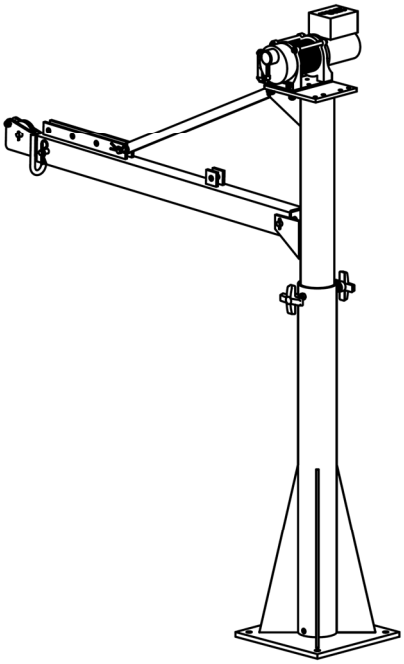

WTJ-E-15-3-DC

Receiving instructions:

After delivery, remove the packaging from the product. Inspect the product closely to determine whether it sustained damage during transport. If damage is discovered, record a complete description of it on the bill of lading. If the product is undamaged, discard the packaging.

NOTE:

The end-user is solely responsible for confirming that product design, installation, use, and maintenance comply with laws, regulations, codes, and mandatory standards applied where the product is used.

Table of Contents

Specifications…… 2
Exploded parts diagrams and bills of materials…… 3 - 4
Signal words…… 5
Hazards of improper use…… 5
Assembling the crane…… 5 – 6
Storage configuration…… 6
Installing the crane…… 7
Function tests…… 7
Using the crane…… 8
Boom angle adjustments…… 9
Boom length adjustments…… 9
Inspections…… 9-10
Troubleshooting Guide…… 10
Labeling diagram…… 10
Limited warranty…… 11

Copyright 2017 Vestil Manufacturing Corp.

Specifications:

Crane dimensions, capacity, and net weight appear in the diagram and table below.

WTJ-E-15-3-DC

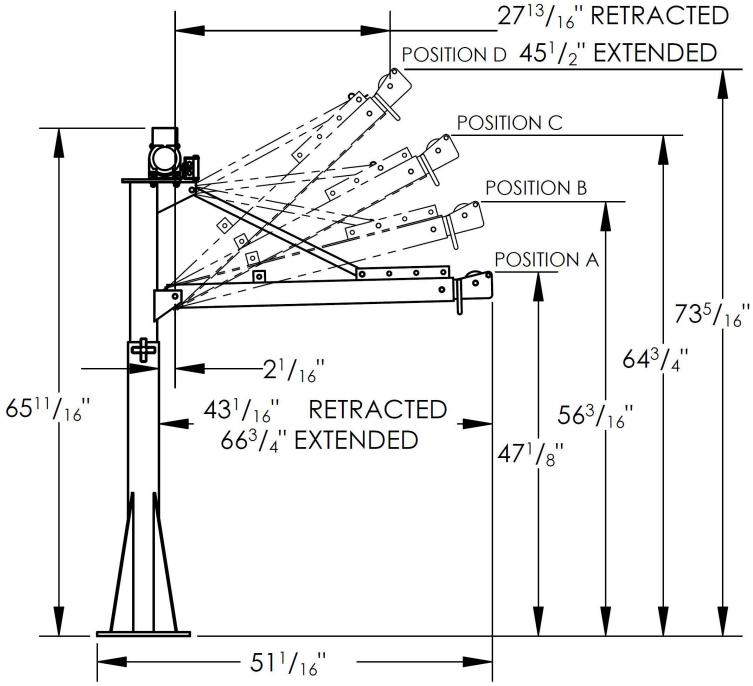

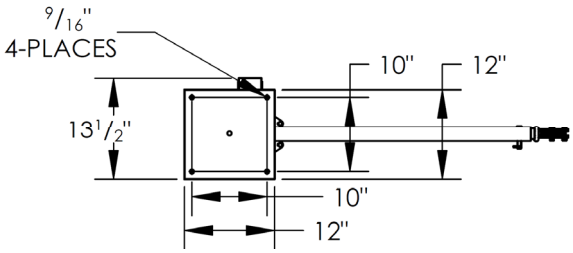

Boom position	Boom fully retracted	Boom extended halfway	Boom fully extended
A	650 lb. (295.5kg)	300 lb. (136.4kg)	200 lb. (90.9kg)
B	1100 lb. (500.0kg)	650 lb. (295.5kg)	550 lb. (250.0kg)
C	1250 lb. (568.2kg)	850 lb. (386.4kg)	650 lb. (295.5kg)
D	1500 lb. (681.8kg)	1150 lb. (522.7kg)	800 lb. (363.6kg)

Capacity = 1,500 lb.
Net weight = 201 lb.
12V DC powered winch with handheld pendant controller
3/16" x 46' long cable with hook

WTJ-E-15-3-AC

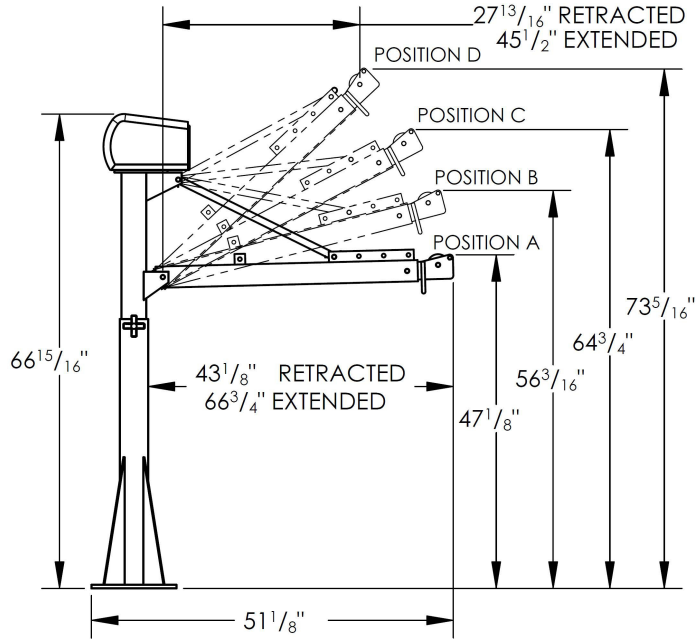

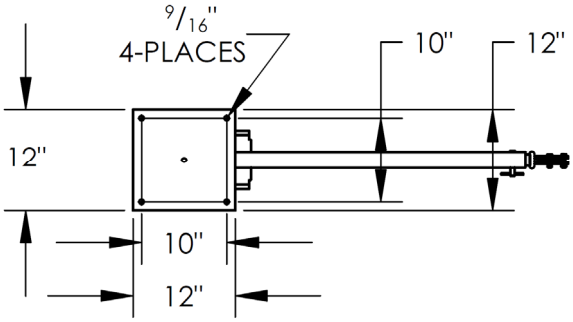

Boom position	Boom fully retracted	Boom extended halfway	Boom fully extended
A	650 lb. (295.5kg)	300 lb. (136.4kg)	200 lb. (90.9kg)
B	1100 lb. (500.0kg)	650 lb. (295.5kg)	550 lb. (250.0kg)
C	1250 lb. (568.2kg)	850 lb. (386.4kg)	650 lb. (295.5kg)
D	1500 lb. (681.8kg)	1150 lb. (522.7kg)	800 lb. (363.6kg)

Capacity = 1,500 lb.
Net weight = 320.0 lb.
12V DC powered winch with handheld pendant controller
3/16" x 46' long cable with hook

Copyright 2017 Vestil Manufacturing Corp.

WTJ-E-15-3-DC Exploded Parts Diagram and Bill of Materials

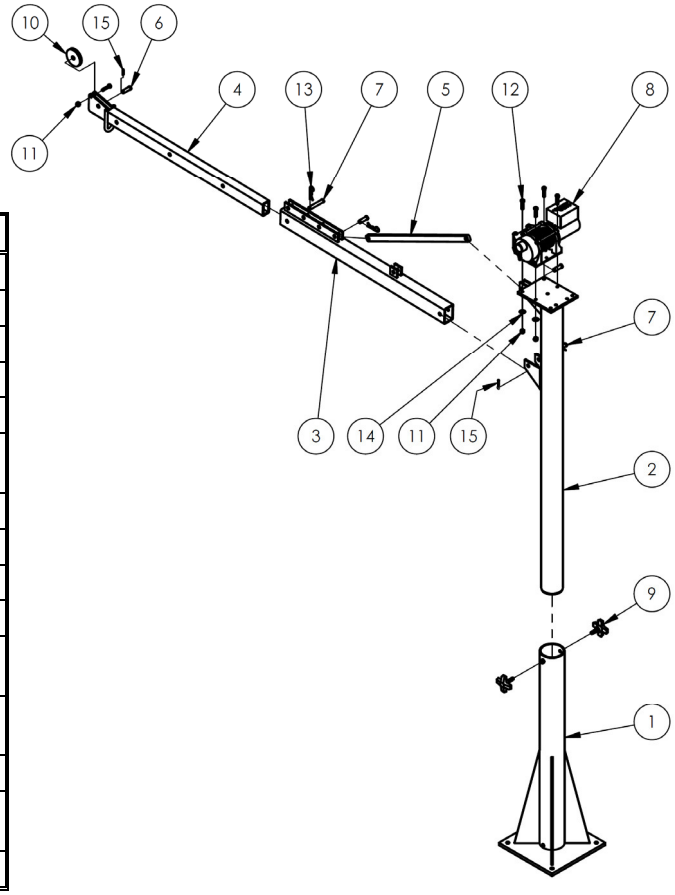

Item	Part no.	Description	Qty.
1	28-514-098	Weldment, mast receiver	1
2	28-514-097	Weldment, frame, mast	1
3	28-514-095	Weldment, outer boom	1
4	28-514-096	Weldment, inner boom	1
5	28-037-005	Lock bar, arm	1
6	28-112-042	Pin, $^1/_2$"x$1^1/_2$" retaining clevis, zinc plated	3
7	28-112-029	Pin, clevis	2
8	28-158-003	12V DC winch	1
9	08-025-007	Knob, $^3/_8$"-16UNC x $1^1/_4$"	2
10	99-027-003	Pulley, cable	1
11	37021	Nylon insert lock nut, gr. 2, zinc finish, $^5/_{16}$"-18	5
12	11059	$^5/_{16}$"-18UNCx$1^1/_2$", zinc plated, #2	5
13	45286	#11 hitch pin clip, $^1/_8$" x $2^5/_8$"	2
14	33006	Flat washer, zinc plated, USS, $^5/_{16}$"	4
15	65076	$^1/_8$"x1" cotter pin, zinc plated	3

Diagram of Fixed Installation (not mounted to vehicle)

Step 1: Create a foundation for the jib. The necessary minimum foundation requirements appear in the diagrams. When the foundation is adequately cured, install $^7/_8$" jam nuts on each anchor bolts. Wind them to the surface of the foundation. Level across the jam nuts by raising or lowering specific nuts until all of the nuts are level. Then, fill the center of the bolt pattern (see "Overhead View of Foundation" diagram) with grout, e.g. Morta Mix. The top of the grout pedestal should be level with the tops of the jam nuts.

Step 2: Set the crane on the foundation. Align the bolt holes in the mounting plate with the anchor bolts and carefully lower the mast onto the leveling nuts. Install $^7/_8$" lock nuts on the anchor bolts but leave them loose. Plumb the mast at 90° increments, i.e. check the vertical levelness of the mast at 4 locations equally spaced around the circumference of the mast. Adjust the leveling nuts to fine tune levelness; then tighten the lock nuts against the mounting plate.

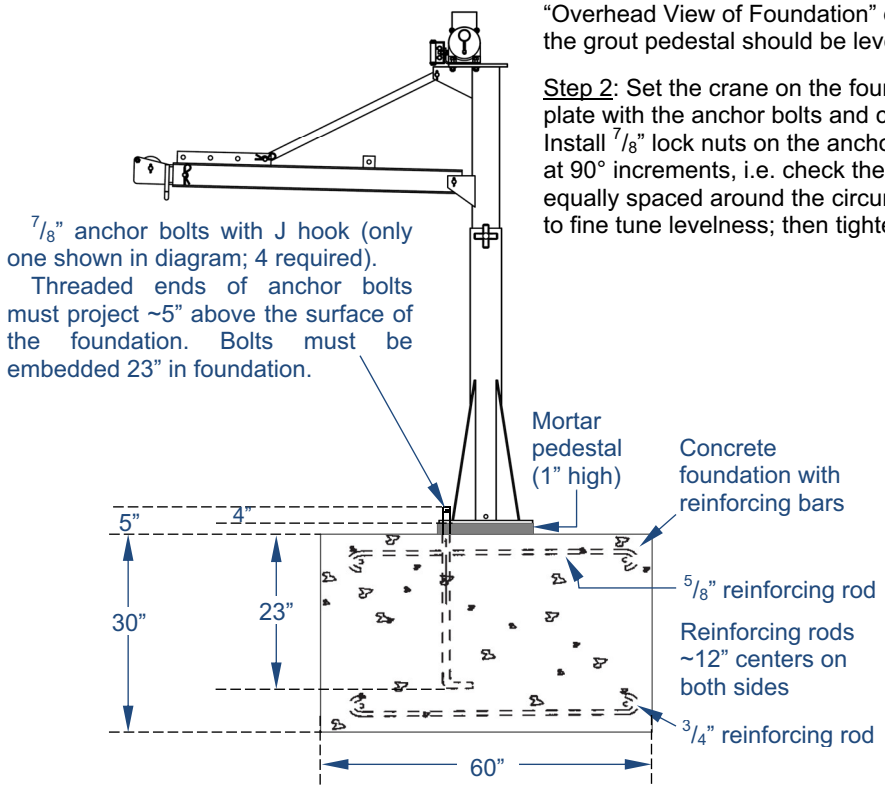

Overhead View of Foundation

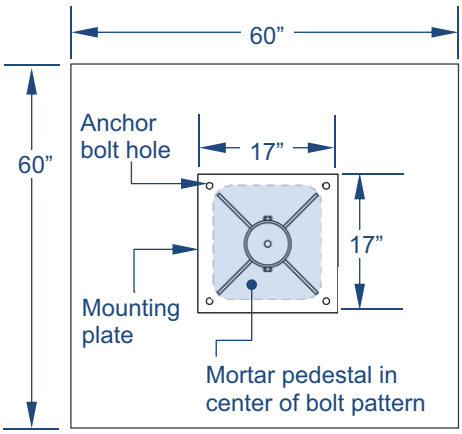

Copyright 2017 Vestil Manufacturing Corp.

WTJ-E-15-3-AC Exploded Parts Diagram and Bill of Materials

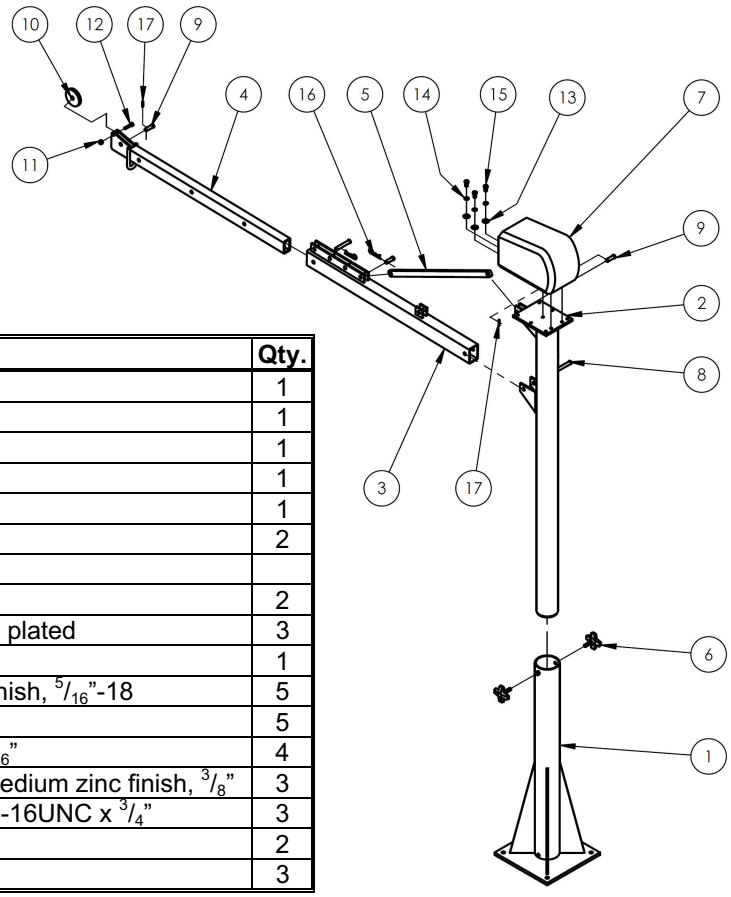

Item	Part no.	Description	Qty.
1	28-514-098	Weldment, mast receiver	1
2	28-514-097	Weldment, frame, mast	1
3	28-514-095	Weldment, outer boom	1
4	28-514-096	Weldment, inner boom	1
5	28-037-005	Lock bar, arm	1
6	08-025-007	Knob, $^3/_8$"-16UNC x $1^1/_4$"	2
7	28-158-001	120V AC winch with clutch	
8	28-112-029	Pin, clevis	2
9	28-112-042	Pin, $^1/_2$"x$1^1/_2$" retaining clevis, zinc plated	3
10	99-027-003	Pulley, cable	1
11	37021	Nylon insert lock nut, gr. 2, zinc finish, $^5/_{16}$"-18	5
12	11059	$^5/_{16}$"-18UNCx$1^1/_2$", zinc plated, #2	5
13	33008	Flat washer, zinc plated, USS, $^5/_{16}$"	4
14	33622	Split lock washer, carbon steel, medium zinc finish, $^3/_8$"	3
15	11103	Hex bolt, grade A, zinc plated, $^3/_8$"-16UNC x $^3/_4$"	3
16	45286	#11 hitch pin clip, $^1/_8$" x $2^5/_8$"	2
17	65076	$^1/_8$"x1" cotter pin, zinc plated	3

Diagram of Fixed Installation (not mounted to vehicle)

Step 1: Create a foundation for the jib. The necessary minimum foundation requirements appear in the diagrams. When the foundation is adequately cured, install $^7/_8$" jam nuts on each anchor bolts. Wind them to the surface of the foundation. Level across the jam nuts by raising or lowering specific nuts until all of the nuts are level. Then, fill the center of the bolt pattern (see "Overhead View of Foundation" diagram) with grout, e.g. Morta Mix. The top of the grout pedestal should be level with the tops of the jam nuts.

Step 2: Set the crane on the foundation. Align the bolt holes in the mounting plate with the anchor bolts and carefully lower the mast onto the leveling nuts. Install $^7/_8$" lock nuts on the anchor bolts but leave them loose. Plumb the mast at 90° increments, i.e. check the vertical levelness of the mast at 4 locations equally spaced around the circumference of the mast. Adjust the leveling nuts to fine tune levelness; then tighten the lock nuts against the mounting plate.

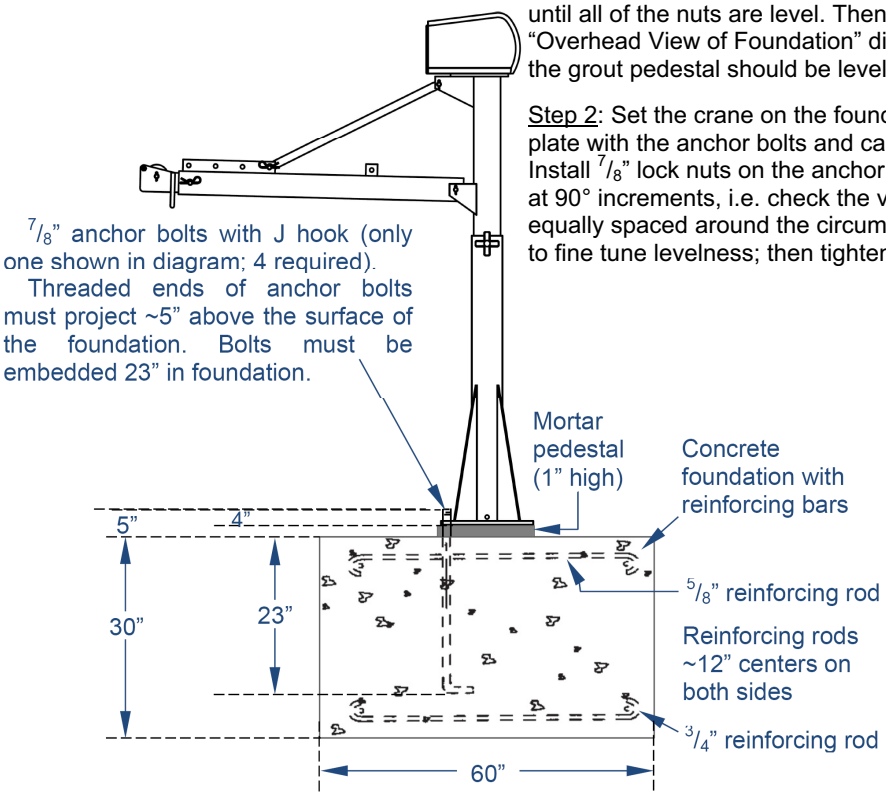

Overhead View of Foundation

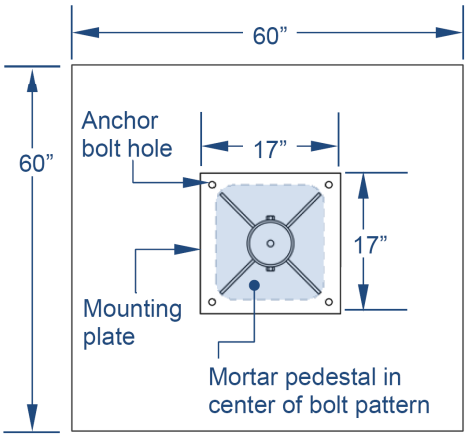

Copyright 2017 Vestil Manufacturing Corp.

Signal Words:

This manual uses SIGNAL WORDS to call attention to uses of this product that are likely to result in personal injuries or property damage. The signal words used in this manual appear below along with their definitions.

DANGER Identifies a hazardous situation which, if not avoided, WILL result in DEATH or SERIOUS INJURY. Use of this signal word is limited to the most extreme situations.

WARNING Identifies a hazardous situation which, if not avoided, COULD result in DEATH or SERIOUS INJURY.

CAUTION Indicates a hazardous situation which, if not avoided, COULD result in MINOR or MODERATE injury.

NOTICE Identifies practices likely to result in product/property damage, such as operation that might damage the product or other property.

Hazards of Improper Use:

Study the entire manual before using this crane. A copy of the manual be stored on, or be attached to, the crane at all times. Read the manual to refresh your understanding of the safe operation, inspection or maintenance procedures whenever necessary.

DANGER DO not install or use the crane in areas where it will contact electrified wires. Electrocution might occur if the crane, hoist, or load, etc. contacts electrified wires.

WARNING Improper or careless operation might result in serious personal injuries.

- ALWAYS apply operation, inspection, and maintenance recommendations in 29 CFR 1910.179. Contact the occupational safety and health institution of the state where the crane is used for requirements applied to jib cranes.
- DO NOT use a damaged or malfunctioning jib! Restore the crane to normal operating condition before returning it to service.
- DO NOT exceed the capacity of your jib (see “Jib specifications” table on p. 2). The weights of the load, hoist, trolley, rigging, and all other equipment attached to the jib must be added together to determine the net weight applied to the jib. The net weight must never exceed the capacity.
- Always perform the “Function Tests” (p. 8) before each use.
- Inform all persons in the area that you are going to use the crane. Instruct them to stay out of the area during operation.
- NO ONE should ever stand beneath or travel under the crane when a load is suspended from it.
- DO NOT use the jib to lift/support people.
- ALWAYS load the jib as recommended on p. 8. Failure to properly position a load might cause the load to swing when it is lifted. Load swing might result in serious injury.
- DO NOT use the crane if any label is unreadable, damaged, or missing (see “Labeling diagram” on p. 10). Contact Vestil for replacement labels.
- DO NOT modify the crane! Modifications automatically void the limited warranty (see p. 11) and might make the crane unsafe to use.

Assembling the Crane: [Numbers in parentheses are part numbers from exploded parts diagrams on p. 3 & 4.]

1) Attach the winch to the top of the mast: DC units fasten with bolts (11059), flat washers (33006), & lock nuts (37021); AC winches attach through bolt slots in the winch guard with bolts (11103), flat washers (33008), and lock washers (33622). Then, insert the mast into the mast receiver. Install the knobs and tighten them against the mast.

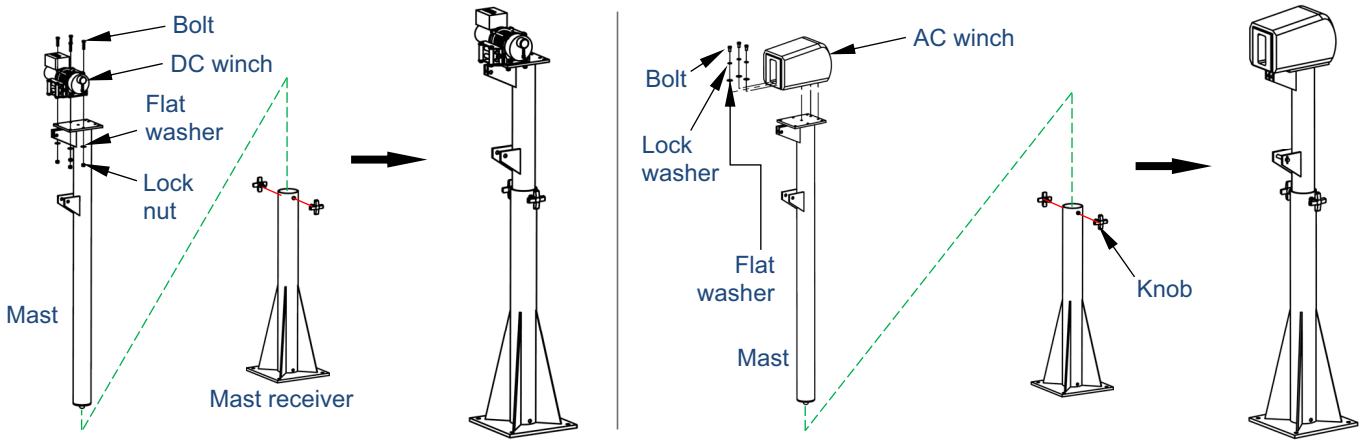

Copyright 2017 Vestil Manufacturing Corp.

2) Pin together the outer boom, the boom brace, and the mast as shown in the diagram. Pin the brace to the boom through the appropriate pin hole (A-D) in the boom bracket (see “Specifications” on p. 2).

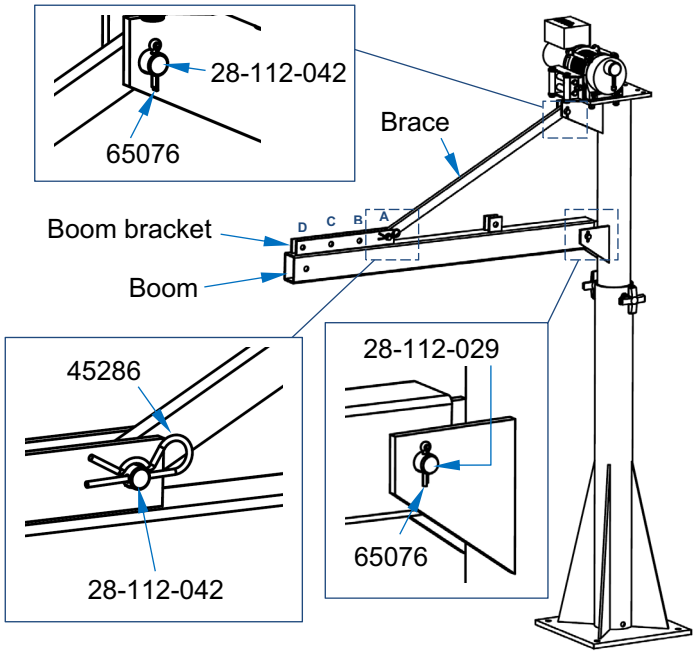

3) Slide the inner boom into the outer boom. There are 3 sets of pin holes in the inner boom. This allows the boom to be configured in 3 lengths. Select a boom length that matches your application (see p. 2). Pin the booms together at the selected location.

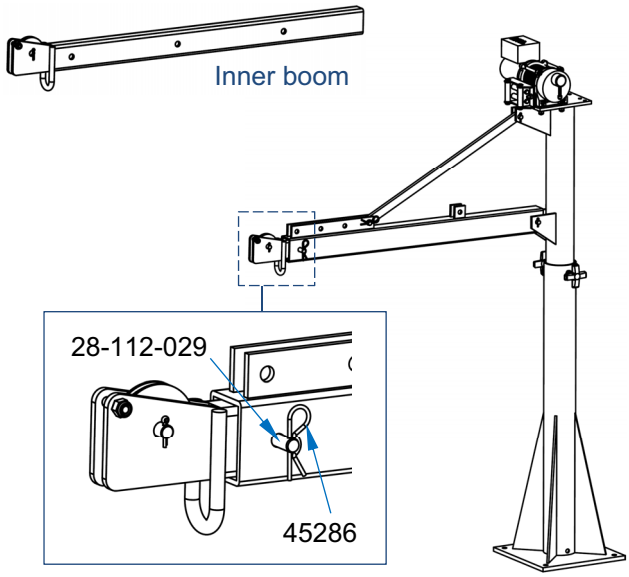

Storage configuration:

Whenever the crane is not in use, put it in storage configuration. Unpin the end of the brace from the boom bracket. Then, re-pin the brace to the storage bracket.

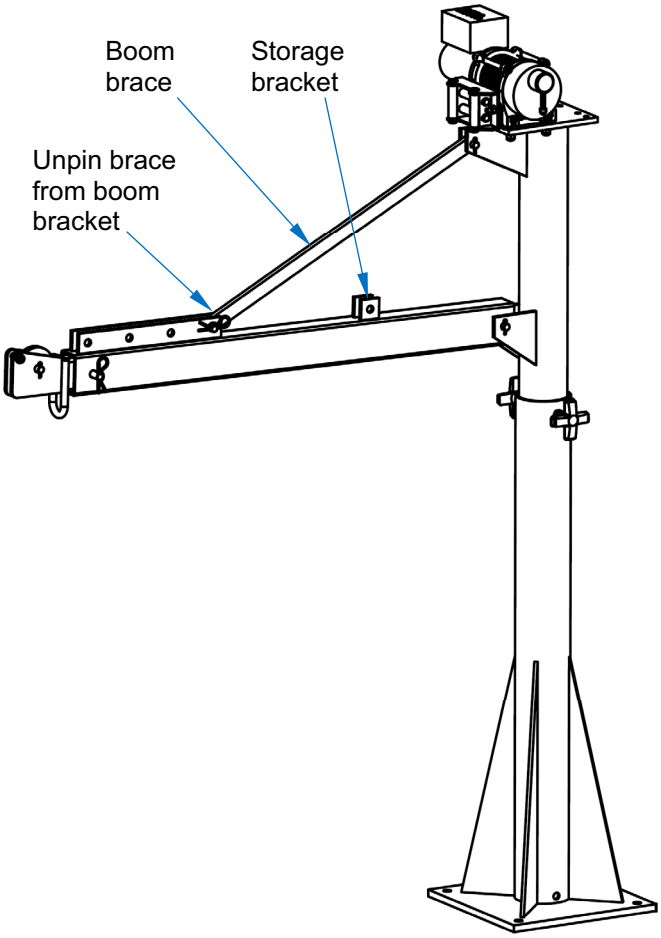

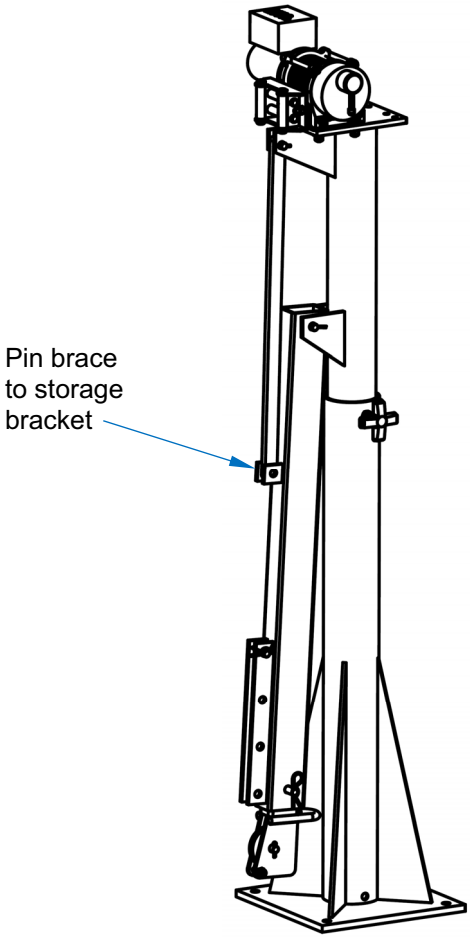

Copyright 2017 Vestil Manufacturing Corp.

Installing the crane on a vehicle:

Refer to the exploded parts diagrams on pages 4 & 5.

Contact the vehicle manufacturer to determine the appropriate place to install the crane as well as the hardware that should be used to fasten the crane to the vehicle. (Bolt holes in the mounting plate are $^{9}/_{16}$" in diameter to accept bolts up to $^{1}/_{2}$"). When choosing an installation site, consider the following factors:

a. The vehicle must be able to support the combined weight of the crane and a load weighing 125% of the capacity, i.e. 1,500 lb. x 1.25 = 1875 lb.
b. The installation location must also be able to withstand the dynamic forces exerted on it by the jib as the vehicle moves.
c. The boom must be able to rotate freely, i.e. without running into the sides of the vehicle.
d. If installing the crane to a fixed position (see p. 4 or 5), the supporting surface must be even, level, and capable of supporting the weight of the crane plus a 125% capacity load.

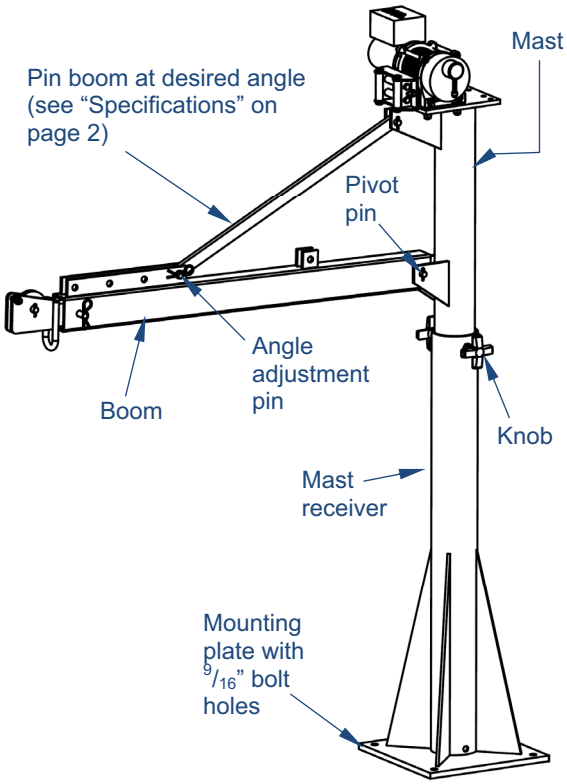

Step 2: The jib should remain completely assembled and in storage configuration (see p. 6) during the installation. Use the mounting plate of the mast receiver as a template for marking the locations of the bolt holes on the vehicle surface. Drill $^{9}/_{16}$" holes in the locations of the markings for the anchoring hardware.

Step 3: Align the bolt holes in the mounting plate with the holes drilled in step 2. One person should stabilize the jib while the other fastens the mounting plate to the vehicle using the hardware and any backing or stiffeners recommended by the vehicle manufacturer.

Step 4: Lift the end of the jib and pin it to the mast at the desired angle. (See "Adjusting Boom Angle" on p. 8). Confirm that the mast is able to rotate freely by carefully pushing the end of the boom in both directions.

Step 5: Connect the power cord to the power supply. On DC-powered units, the power supply cord and pendant control cable must be plugged into the winch.

Step 6: Lower and raise the cable hook using the toggle switch (AC units) or the handheld pendant controller (DC units). Watch the cable and confirm that it smoothly winds off of and onto the winch spool.

Step 7: Perform a load test on the jib by using it to lift a test weight equal to 125% of the rated capacity (1,875 lb.). Inspect both the crane and the vehicle after performing the load test. Look for cracks, bends, and other forms of damage at and around the installation site. Repair the site, if necessary, and perform another load test to confirm that problems are resolved.

Overhead View of Mast Receiver

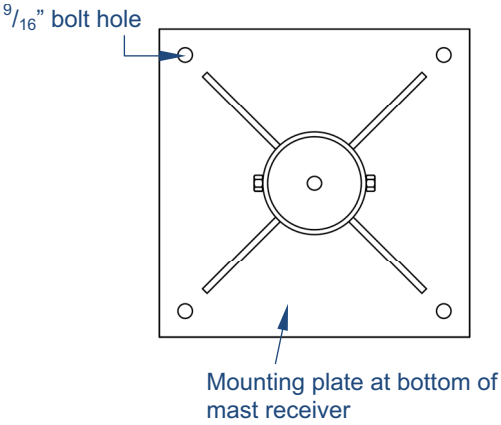

Function Tests:

Verify that the jib operates normally by performing the tests below. If an issue is discovered, tag the crane "Out of Service". Restore the crane to normal operating condition before returning it to service.

1. Test the mast bearing: Rotate the boom in both directions. Make sure that it rotates smoothly. Listen for unusual noises. If the crane wobbles or is unusually noisy as it rotates, remove the mast from the receiver and grease the bearing at the bottom. If lubrication does not resolve the problem, the bearing might need to be replaced. Contact the factory to discuss the problem and to order replacement parts.
2. Test the winch: Lower and raise the load hook. Make sure that the hook moves at a constant rate. The cable should not bind as the winch operates.

Copyright 2017 Vestil Manufacturing Corp.

Using the crane:

[NOTE: An auxiliary handle is provided with AC-powered winches. It can be used to manually wind/unwind the cable and should only be used if the winch does not operate (e.g. loss of power). The handle must not be attached when the winch operates by electric power.]

1. Connect the power cord to the power supply.
   a. AC units: connect to a properly grounded, GFCI-protected, 115V outlet.
   b. DC units: make sure battery connections are secure.
2. Apply appropriate rigging to the load.
3. Adjust the length and angle of the boom as your application requires. Consult the appropriate table on page 2 to make sure that the load does not exceed the capacity of the crane in its present configuration.
4. The winch is electronically controlled.
   a. DC-powered jibs utilize a constant pressure ("dead man") pushbutton controller.
   b. AC-powered units are controller with a toggle switch located on the winch body.

   Press the DOWN button on the handheld controller (DC units), or press the toggle switch in the DOWN direction (AC units). The winch will operate only while a control button is pressed. Releasing the button causes the winch to stop and the hook will maintain its position. Lower the hook sufficiently that the load rigging can be attached to it. The load center should be directly below the hook to prevent significant load swing as the load rises. Proper and improper positioning is diagrammed below:

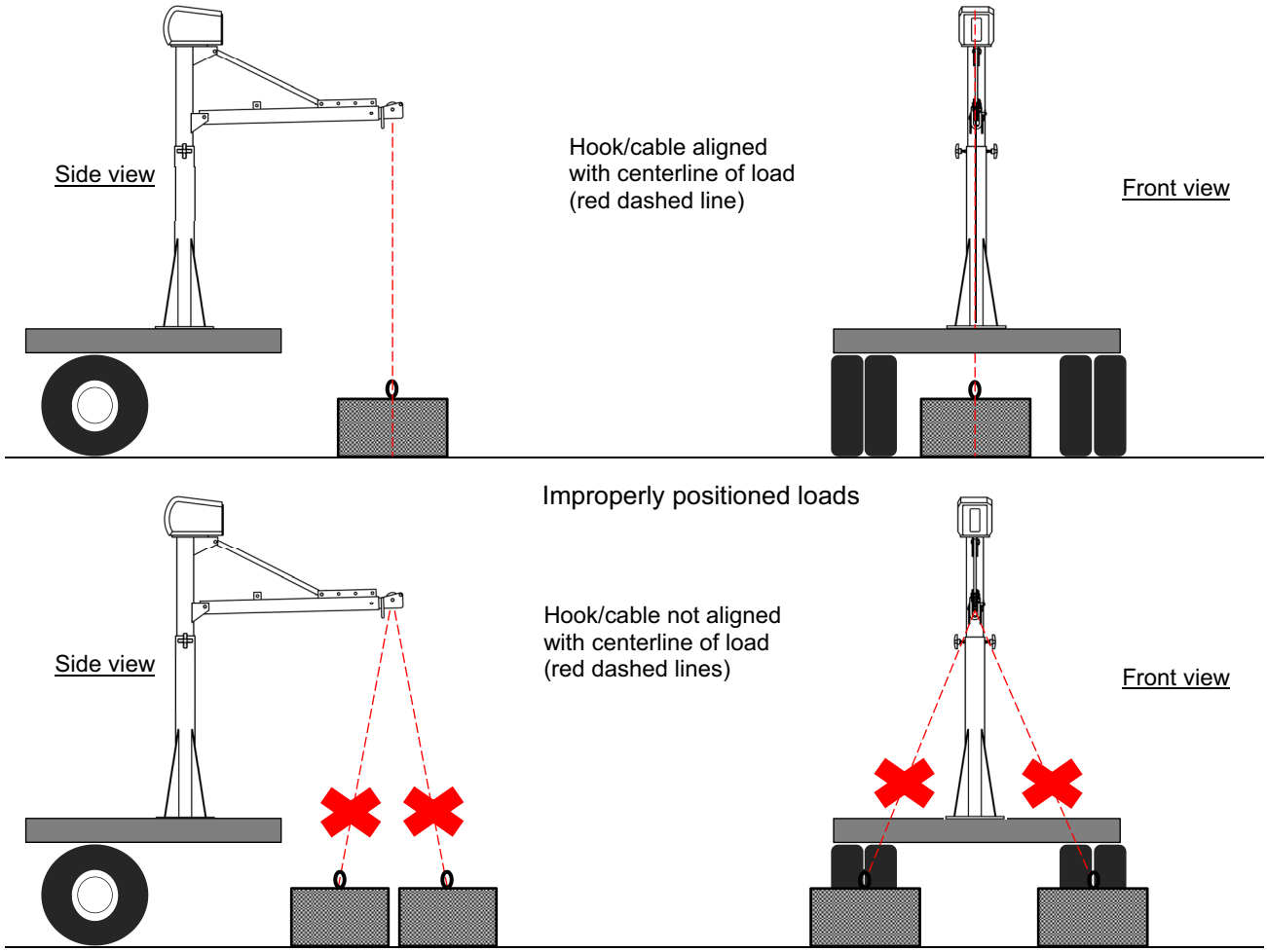

5. Tighten the knobs tightly against the mast.
6. Press the UP button/toggle switch to raise the load. Loosen the knobs and rotate the boom slowly and direct the load to the desired location. Lower the load so that it is entirely supported by the vehicle before moving the vehicle.
   NOTE: The winch is designed for intermittent use. Extended use without pause to allow the motor to cool will damage the motor. Maximum continuous run time is 3 minutes.
7. Put the crane into transport configuration:
   a. Retract the boom (see "Boom Length Adjustments" on p. 9)
   b. Remove the pivot pin. Rotate the boom so that it rests against the mast. Strap the boom to the mast to prevent it from bouncing during transport.
   c. Unplug the winch power cord and store it inside the vehicle whenever the jib is not in use.

Copyright 2017 Vestil Manufacturing Corp.

Boom Angle Adjustments:

The boom can be set at any of 4 positions to change the maximum lifting height. To adjust the boom angle:

1. Press the DOWN button to lower the hook a few feet below the end of the boom.
2. Remove the hitch pin from the end of the angle adjustment pin (the "AAP").
3. Remove the AAP. Do not remove the pivot pin.
4. Raise the boom. Align the pin hole in the boom brace with the holes in the boom bracket at the desired position (A-D) and reinsert the AAP.

REMINDER: Boom angle affects the lifting capacity of the crane. After changing the boom angle, consult the appropriate table on p. 2 to determine the capacity of your crane in its current configuration.

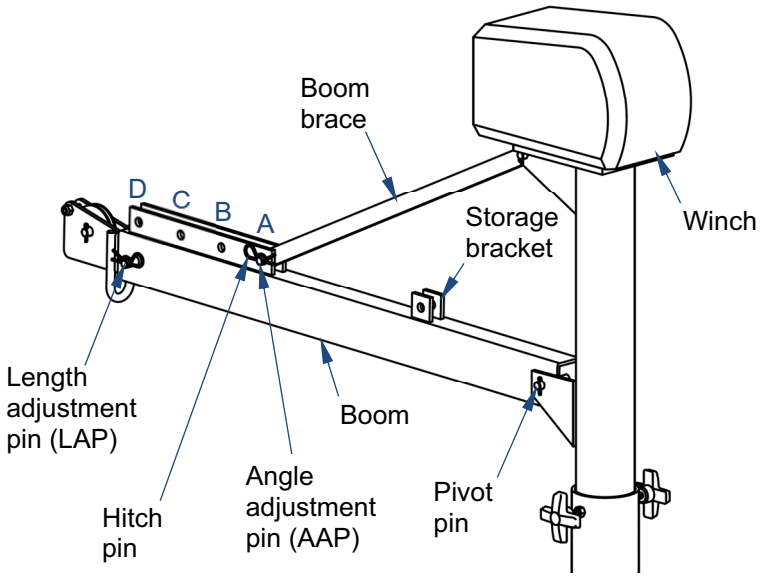

Boom length adjustments:

The boom consists of a 2 telescoping segments. The telescoping relationship allows the overall length to be adapted as necessary for specific applications. To change the boom length, unload the crane and then:

1. Lower the hook a few feet by pressing the DOWN button.
2. Remove the hitch pin from the end of the Length Adjustment Pin ("LAP") and remove the LAP.
3. Grasp the end of the (inner) boom.
4. Pull the inner boom until the appropriate pin holes in the inner and outer boom segments align.
5. Reinstall the LAP and the hitch pin.

REMINDER: Boom length affects the lifting capacity of the crane. After changing the boom length, consult the appropriate table on p. 2 to determine the capacity of your crane.

Inspections:

After receiving the unit and before using it for the first time, create a written record that describes the appearance of each part of the crane and how it operates. Cycle the winch up and down. Record your observations about how the unit looks and sounds as the hook rises and lowers. Measure the throat opening of the hook and record the measurement. This written record establishes "normal condition". When conducting future inspections compare observations with the written record to determine whether a component is in normal condition or requires repair or replacement. If issues are discovered during an inspection, restore the unit to normal condition before returning it to service.

Inspect and maintain the unit as described below to preserve normal operability. Remove it from service if it is damaged in any way that affects normal operation. If the unit cannot be restored to normal condition, disassemble it and dispose of the parts. The unit must be retested at 125% of its rated capacity anytime the crane is repaired or modified.

At least once per month inspect the following:

1. Winch and pulleys: cycle the winch up and down. Confirm that the cable winds off of and back onto the drum smoothly. The hook should not lower on its own. The cable pulley should not be loose or severely worn and should rotate freely as the cable passes over it.
2. Winch cable: check for reeving, fraying, thinning, birdcaging, and elongating regions. If the cable is damaged, replace it.
3. Winch power cord: examine the cord for damage and areas where the outer sheath has been damaged. Repair all damage before using the winch again.
4. Frame elements: examine the mast receiver, mast, and both segments of the boom for damage, deformation, corrosion, cracked welds, and severe wear. Inspect all pivot points for severe wear. All frame members should be square, rigid, and free of significant rusting. Remove rust with steel wool or a metal bristle brush , clean the areas to remove rust particles, and apply touchup paint to the affected areas.
5. Hook: visually inspect the hook before each use. Look for deformations and cracks. Immediately discard the hook if it is cracked or if the throat opening is more than 15% in excess of the original throat opening. Discard the hook if it is twisted more than 10° from the plane of the hook in its original condition. Confirm normal operation and operation of the safety latch.

Copyright 2017 Vestil Manufacturing Corp.

6. Vehicle: inspect the vehicle where the crane is mounted. Closely examine the area around the mounting plate. Look for rust, corrosion, and metal fatigue. Check the mounting plate (base of the mast), the anchoring hardware, and the vehicle bed/floor particularly around the anchor bolts. Make sure that the mast is securely anchored (i.e. does not wobble). Confirm that anchoring hardware is in normal condition.
7. Labels: confirm that all labels are in good condition and in place as shown in the "Labeling Diagram" (below).

Every 6 months:
Conduct a load test. Lift a test weight equal to 125% of the capacity. After the test, examine the crane, winch, cable, and the vehicle where the crane is mounted. Look for deformations, cracks, and metal fatigue. Do not continue to use the crane unless both it and the supporting vehicle are in normal condition.

Troubleshooting Guide:

Always unload the crane and disconnect the winch from the power supply before troubleshooting an issue.

Problem	Possible causes	Solutions
1) Winch doesn't work when button pressed	a. No supply voltage b. Bad connection in control circuit c. Battery discharged	a. Test with meter. Check circuit protectors for open condition. If circuit protection has opened, test all parts of circuit with multimeter. Verify power supply cord and controller cord are properly attached to winch. b. Test with multimeter. c. Test with volt meter. Charge battery is low (12.65V = full charge).
2) Cable jumps or lurches as the winch operates	d. Poor spooling on winch reel/drum e. Kink in cable	d. Spool out the cable and inspect it for kinks, etc. Respool cable onto winch reel. Replace cable if damaged. e. Replace cable if kinks cannot be straightened.
3) Winch motor hums but drum does not rotate	f. Overload condition g. Supply voltage too low	f. Reduce load weight. Verify cable not binding. g. Check with meter. Charge battery (DC units) or change supply cord (AC units). Supply cord should be as wide and short as possible.
4) Mast does not rotate without great effort	h. Knobs tightened. i. Bearing overly worn.	h. Loosen knobs. i. Remove mast from mast receiver. Inspect bearing. Replace bearing if severely worn.
5) Personnel receive electric shocks when touching the jib or vehicle when winch in use.	j. Operating winch in wet conditions k. Winch wiring problem.	j. Allow winch to dry completely before using it again. k. Check winch electrical circuit including ground.

Labeling Diagram:

The unit should be labeled as shown in the diagram. Replace all labels that are missing, damaged, or not easily readable (e.g. faded).

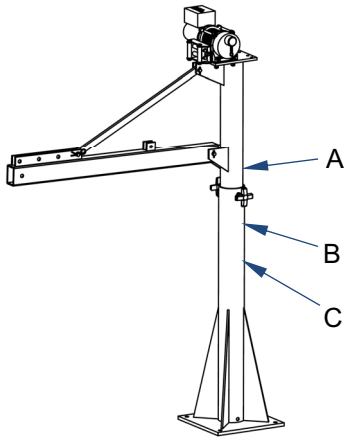

A: Label 1038

Tighten knob before moving vehicle
Apriete la perilla antes de vehiculo móvil
Resserrer le bouton avant de déplacer véhicule

C: Label 287 (covered with label 770)

MODEL/MODÈLO/MODÈLE _____
STATIC CAPACITY (evenly distributed) _____ lbs.
LA CAPACIDAD CONSTANTE (distribuida uniformemente) _____ kgs.
CAPACITÉ STATIQUE (distribuée régulièrement) _____ kgs.
SERIAL/SERIE/SÉRIE _____
287 REV 0812

B: Label 829

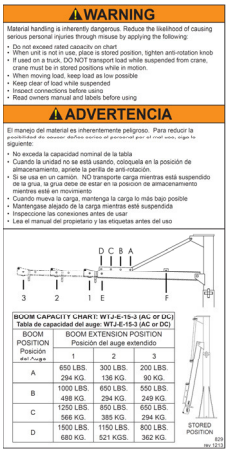

WARNING

Material handling is inherently dangerous. Reduce the likelihood of causing serious personal injuries through misuse by applying the following:

- Do not exceed rated capacity on chart
- When unit is not in use, place is stored position, tighten anti-rotation knob
- If used on a truck, DO NOT transport load while suspended from crane, crane must be in stored positions while in motion.
- When moving load, keep load as low possible
- Keep clear of load while suspended
- Inspect connections before using
- Read owners manual and labels before using

ADVERTENCIA

El manejo del material es inherentemente peligroso. Para reducir la posibilidad de causar daños serios al personal por el mal uso, siga lo siguiente:

- No exceda la capacidad nominal de la tabla
- Cuando la unidad no se está usando, colóquela en la posición de almacenamiento, apriete la perilla de anti-rotación.
- Si se usa en un camión. NO transporte carga mientras está suspendido de la grua, la grua debe de estar en la posicion de almacenamento mientras esté en movimiento
- Cuando mueva la carga, mantenga la carga lo más bajo posible
- Mantengase alejado de la carga mientras esté suspendida
- Inspeccione las conexiones antes de usar
- Lea el manual del propietario y las etiquetas antes del uso

D C B A
3 2 1 E F

BOOM CAPACITY CHART: WTJ-E-10-3 (AC or DC)
Tabla de capacidad del auge: WTJ-E-15-3 (AC or DC)

BOOM POSITION Posición del Auge	BOOM EXTENSION POSITION Posición del auge extendido		
	1	2	3
A	650 LBS. 294 KG.	300 LBS. 136 KG.	200 LBS. 90 KG.
B	1000 LBS. 498 KG.	650 LBS. 294 KG.	550 LBS. 249 KG.
C	1250 LBS. 566 KG.	850 LBS. 385 KG.	650 LBS. 294 KG.
D	1500 LBS. 680 KG.	1150 LBS. 521 KGS.	800 LBS. 362 KG.

STORED POSITION

829
REV 12-13

LIMITED WARRANTY

Vestil Manufacturing Corporation ("Vestil") warrants product to be free of defects in material and workmanship during the warranty period. *Our warranty obligation is to provide a replacement for a defective original part **if** the part is covered by the warranty, after we receive a proper request from the warrantee (you) for warranty service*.

Who may request service?
Only a warrantee may request service. *You are a warrantee **if*** you purchased the product from Vestil or from an authorized distributor AND Vestil has been fully paid.

What is an "original part"?
An original part is a part *used to make the product as shipped* to the warrantee.

What is a "proper request"?
A request for warranty service is proper if Vestil receives: 1) a photocopy of the Customer Invoice that displays the shipping date; AND 2) a written request for warranty service including your name and phone number. Send requests by any of the following methods:

Mail	Fax	Email
Vestil Manufacturing Corporation	(260) 665-1339	sales@vestil.com
2999 North Wayne Street, PO Box 507	Phone	
Angola, IN 46703	(260) 665-7586	

In the written request, list the parts believed to be defective and include the address where replacements should be delivered.

What is covered under the warranty?
After Vestil receives your request for warranty service, an authorized representative will contact you to determine whether your claim is covered by the warranty. Before providing warranty service, Vestil may require you to send the entire product, or just the defective part or parts, to its facility in Angola, IN. The warranty covers defects in the following *original* dynamic components: motors, hydraulic pumps, electronic controllers, switches and cylinders. It also covers defects in *original* parts that wear under normal usage conditions ("wearing parts"), such as bearings, hoses, wheels, seals, brushes, and batteries.

How long is the warranty period?
The warranty period for original dynamic components is 90 days. For wearing parts, the warranty period is 90 days. The warranty periods begin on the date when Vestil ships the product to the warrantee. If the product was purchased from an authorized distributor, the periods begin when the distributor ships the product. Vestil may, at its sole discretion, extend the warranty periods for products shipped from authorized distributors by *up to* 30 days to account for shipping time.

If a defective part is covered by the warranty, what will Vestil do to correct the problem?
Vestil will provide an appropriate replacement for any *covered* part. An authorized representative of Vestil will contact you to discuss your claim.

What is not covered by the warranty?

1. Labor;
2. Freight;
3. Occurrence of any of the following, which automatically voids the warranty:
    - Product misuse;
    - Negligent operation or repair;
    - Corrosion or use in corrosive conditions;
    - Inadequate or improper maintenance;
    - Damage sustained during shipping;
    - Accidents involving the product;
    - Unauthorized modifications: DO NOT modify the product IN ANY WAY without first receiving written authorization from Vestil. Modification(s) might make the product unsafe to use or might cause excessive and/or abnormal wear.

Do any other warranties apply to the product?
Vestil Manufacturing Corp. makes no other express warranties. All implied warranties are disclaimed to the extent allowed by law. Any implied warranty not disclaimed is limited in scope to the terms of this Limited Warranty.

Copyright 2017 Vestil Manufacturing Corp.